SPECIFICATION

CITY LIFE

Model: **CITY LIFE HIGH BASIN MIXER**

Code: CL.1000HBN Brushed Nickel
CL.1000HMB Matte Black
CL.1000HGM Gun Metal
CL.1000HBB Brushed Brass
CL.1000HBRZ Brushed Bronze

Features: Lead Free
304 Stainless Steel
35mm Ceramic Cartridge
150 - 500pka working Pressure
Suitable for High/Mains Pressure Only
Approx. 4.5L/min Water Flow Rate
Wels 6 Star

304 Stainless **Lead Free**

LEADFREE LEADFREE LEADFREE LEADFREE LEADFREE LEADFREE LEADFREE LEADFREE LEADFREE LEADFREE

ENDURANCE + QUALITY + RELIABILITY

Constructed from the highest grade of corrosion resistant stainless steel giving you the confidence and peace of mind that health and safety comes first when it comes to water experiences. Brass fittings and faucets with long hours of sitting water is a catalyst for lead leaching, producing high levels of harmful toxins. Verotti Lead Free Tapware is committed to delivering health and wellbeing as it's highest priority.

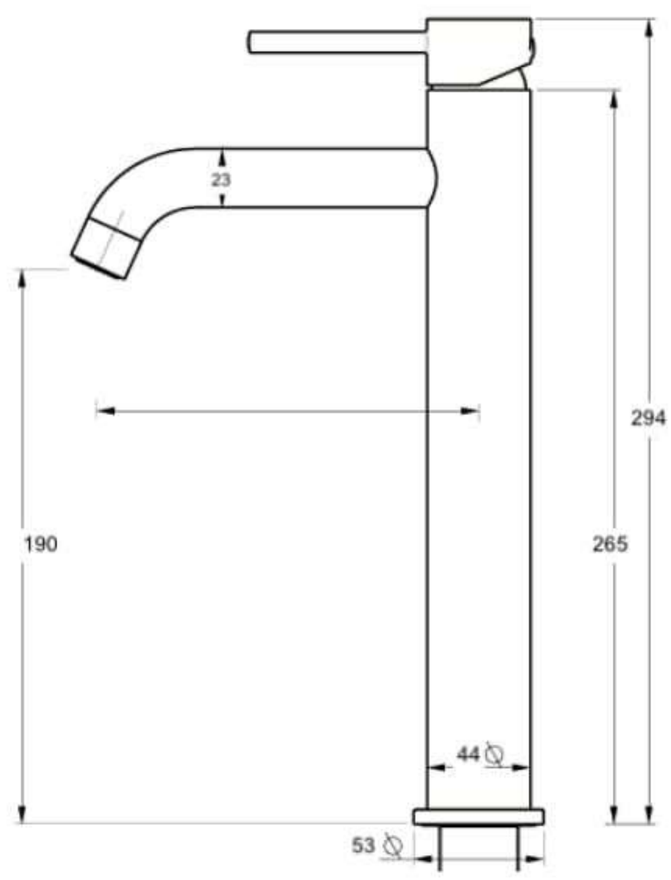

WaterMark

WATER RATING
www.waterrating.gov.au

verotti
Bathroom Culture

Information provided represents the actual product available at the time 01/01/2021.
The design and specification are subject to change without notice.
Dimensions are approximate.