SPECIFICATION

CITY LIFE

Model: **CITY LIFE INOX SHOWER MIXER**

Code: CL.2000BN Brushed Nickel
CL.2000MB Matte Black
CL.2000GM Gun Metal
CL.2000BB Brushed Brass
CL.2000BRZ Brushed Bronze

Features: Lead Free
304 Stainless Steel
35mm Ceramic Cartridge
150 - 500pka working Pressure
Suitable for High/Mains Pressure Only

304 Stainless Lead Free

LEADFREE LEADFREE LEADFREE LEADFREE LEADFREE LEADFREE LEADFREE LEADFREE LEADFREE LEADFREE

ENDURANCE + QUALITY + RELIABILITY

Constructed from the highest grade of corrosion resistant stainless steel giving you the confidence and peace of mind that health and safety comes first when it comes to water experiences. Brass fittings and faucets with long hours of sitting water is a catalyst for lead leaching, producing high levels of harmful toxins. Verotti Lead Free Tapware is committed to delivering health and wellbeing as it's highest priority.

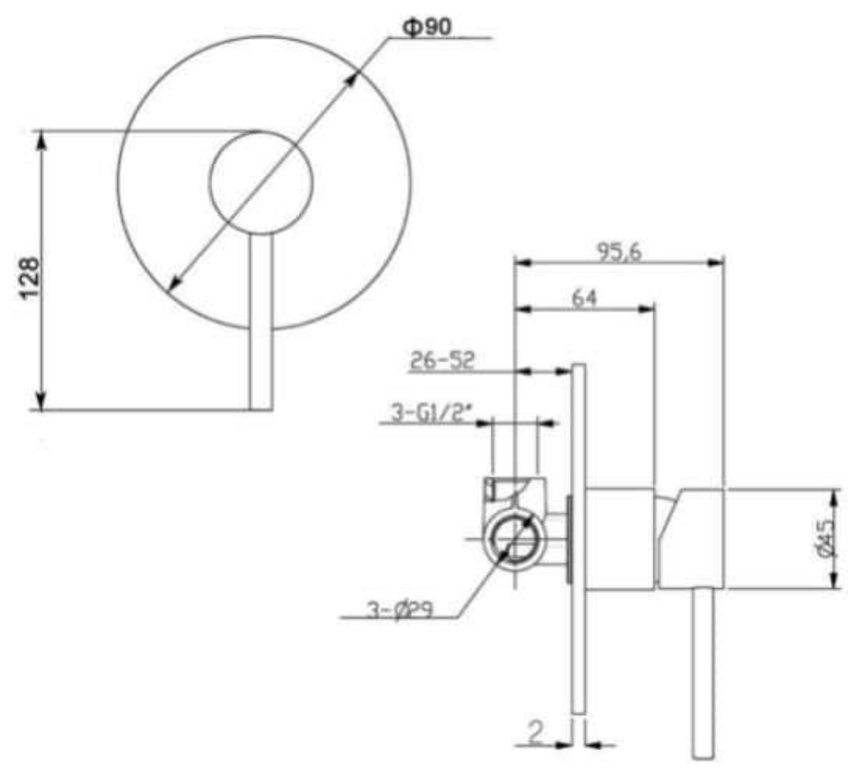

WaterMark

verotti Bathroom Culture

Information provided represents the actual product available at the time 01/01/2021.
The design and specification are subject to change without notice.
Dimensions are approximate.

www.verotti.com | T.1300 837 688 | customercare@verotti.com